DocuSign Envelope ID: 297288F0-1416-4DB2-9AD3-7F8A03E8E71F

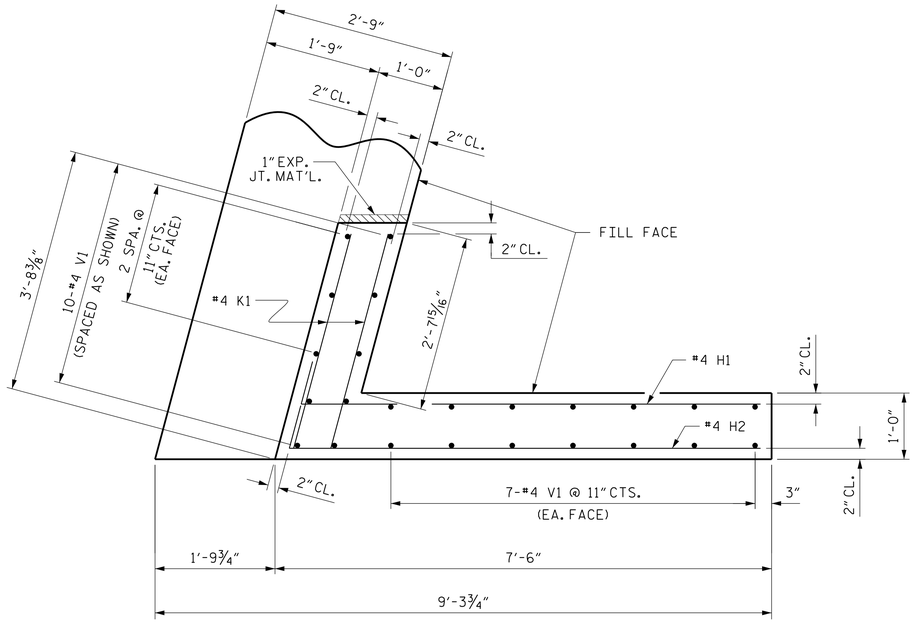

PLAN OF WING (W1)

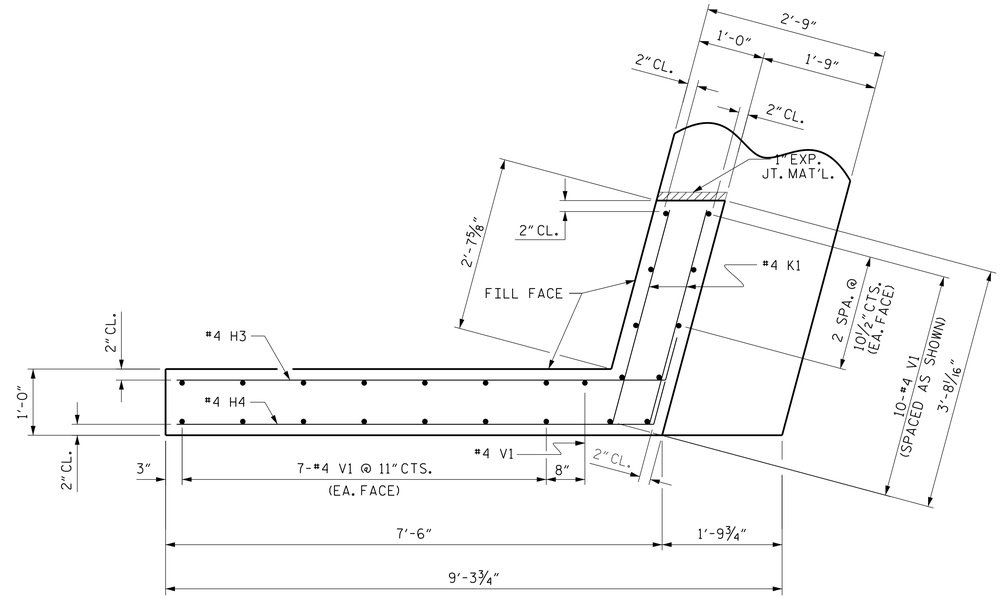

PLAN OF WING (W2)

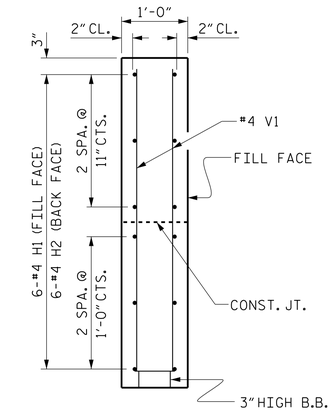

SECTION X-X

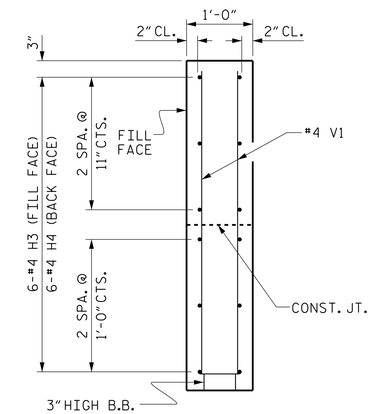

SECTION Y-Y

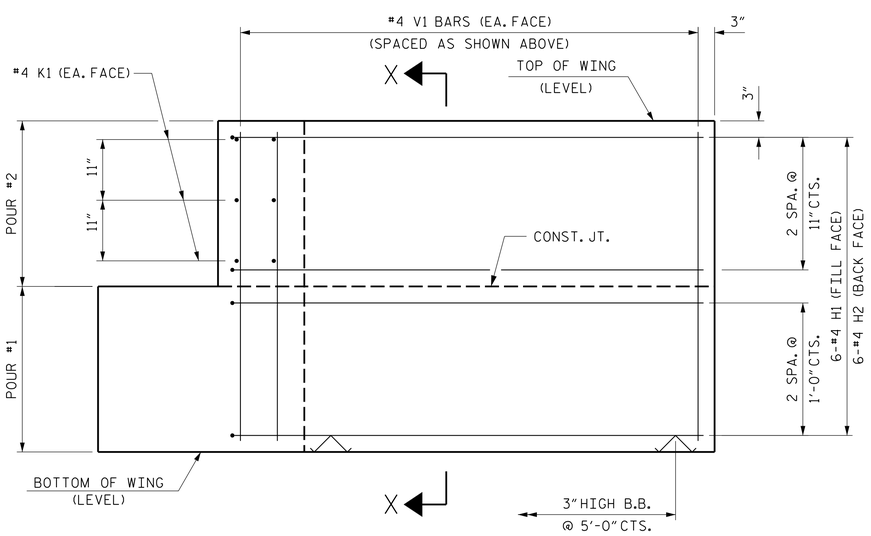

ELEVATION OF WING (W1)

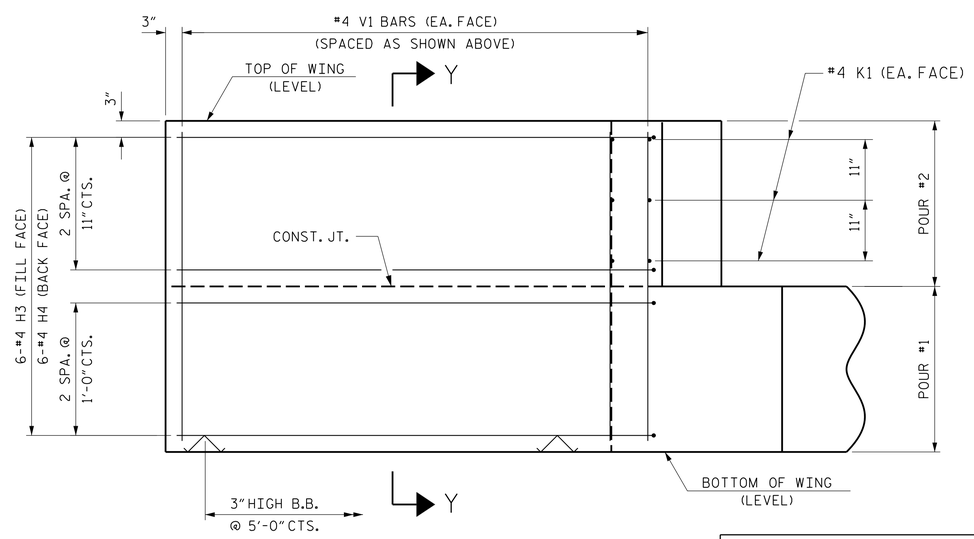

ELEVATION OF WING (W2)

WING DETAILS

PROJECT NO. 17BP.1.R.93

PERQUIMANS COUNTY

STATION: 17+08.00 -L-

SHEET 3 OF 4

DOCUMENT NOT CONSIDERED FINAL UNLESS ALL SIGNATURES COMPLETED

THIS STANDARD DRAWING REVIEWED & ADOPTED FOR USE AT THE REFERENCED LOCATION BY THE UNDERSIGNED:

DocuSigned by: Gwendolyn Wilson
Engineer Manager
3/26/2021

PLANS PREPARED BY:

NV5 ENGINEERS & CONSULTANTS, INC.
3300 REGENCY PARKWAY, SUITE 100
CARY, NC 27518
P: 919.851.1912 www.NV5.com
NC License # F-1333
formerly CALYX Engineers & Consultants

STATE OF NORTH CAROLINA
DEPARTMENT OF TRANSPORTATION
RALEIGH

SUBSTRUCTURE
END BENT
WING DETAILS

REVISIONS						SHEET NO.
NO.	BY:	DATE:	NO.	BY:	DATE:	S-16
1			3			TOTAL SHEETS
2			4			24

ASSEMBLED BY : W. B. ALLEN		DATE : 5/19	
CHECKED BY : G. F. WILSON		DATE : 8/19	
DRAWN BY : DGE 03/10	REV. 4/15	MAA/TMG	
CHECKED BY : MKT 03/10			

STD. NO. EB_33_105S

3/26/2021 7:40:36 AM R:\Structures\17BP.1.R.93_SMU_E3_710029.dgn