DocuSign Envelope ID: 297288F0-1416-4DB2-9AD3-7F8A03E8E71F

NOTES

STIRRUPS IN CAP MAY BE SHIFTED AS NECESSARY TO CLEAR DOWELS.

★ INVERT ALTERNATE STIRRUPS.

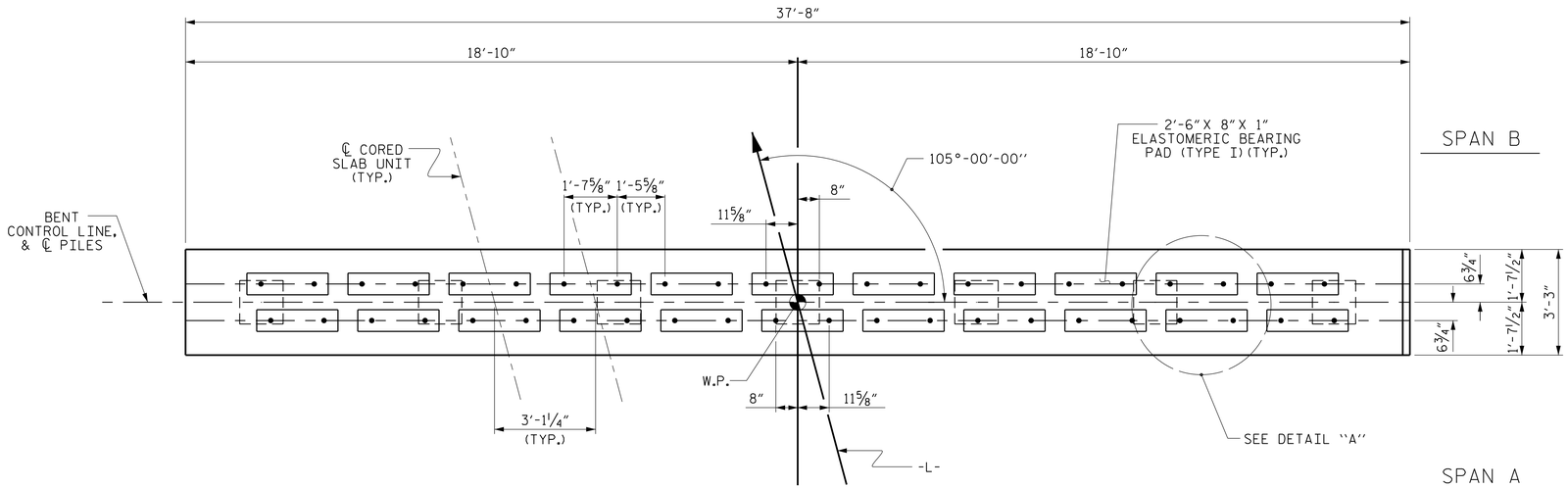

PLAN

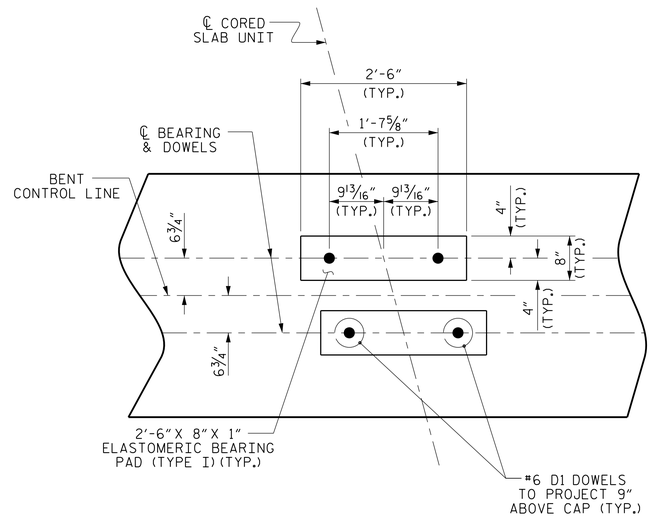

DETAIL "A"

(DIMENSIONS ARE TYPICAL EACH BEARING)

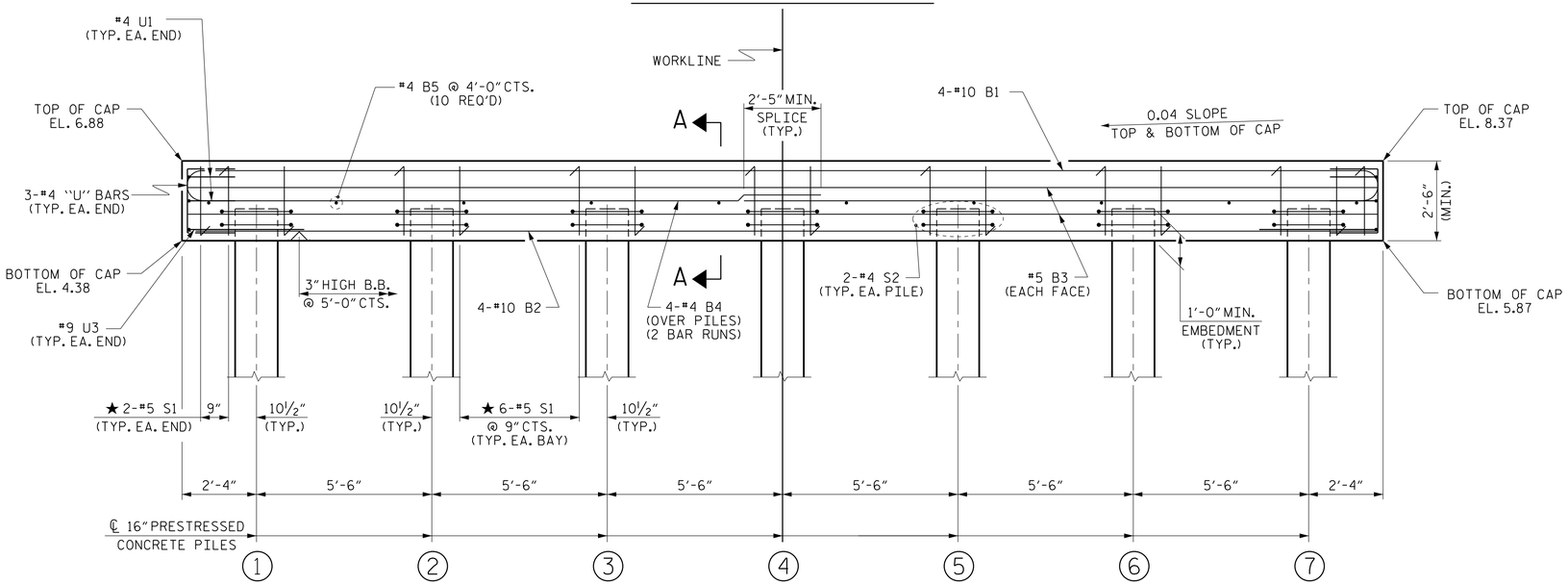

ELEVATION

FOR SECTION A-A, SEE SHEET 2 OF 2

TOP OF PILE ELEVATIONS	
1	5.50
2	5.72
3	5.94
4	6.16
5	6.38
6	6.60
7	6.82

PROJECT NO. 17BP.1.R.93

PERQUIMANS COUNTY

STATION: 17+08.00 -L-

SHEET 1 OF 2

STATE OF NORTH CAROLINA
DEPARTMENT OF TRANSPORTATION
RALEIGH

SUBSTRUCTURE

BENT No. 1

DOCUMENT NOT CONSIDERED FINAL UNLESS ALL SIGNATURES COMPLETED

THIS STANDARD DRAWING REVIEWED & ADOPTED FOR USE AT THE REFERENCED LOCATION BY THE UNDERSIGNED:

NORTH CAROLINA PROFESSIONAL SEAL ENGINEER GARY FOLLEN F. WILSON 045282

DocuSigned by: Garry Wilson
3/26/2021

PLANS PREPARED BY:

NV5 ENGINEERS & CONSULTANTS, INC.
3300 REGENCY PARKWAY, SUITE 100
CARY, NC 27518
P: 919.851.1912 www.NV5.com
NC License # F-1333
formerly CALYX Engineers & Consultants

REVISIONS							
NO.	BY:	DATE:	NO.	BY:	DATE:	SHEET NO.	S-18
1			3			TOTAL SHEETS	24
2			4				

ASSEMBLED BY :	W. B. ALLEN	DATE :	8/19
CHECKED BY :	G. F. WILSON	DATE :	8/19
DRAWN BY : DGE 5/10	REV. 6/17	MAA/THC	
CHECKED BY : MKT 5/10			

STD. NO. 16" PS_BT_33_105S_<60'

3/26/2021 7:10:40 AM R:\Structures\17BP.1.R.93_SMU_B1_70029.dgn