DocuSign Envelope ID: 297288F0-1416-4DB2-9AD3-7F8A03E8E71F

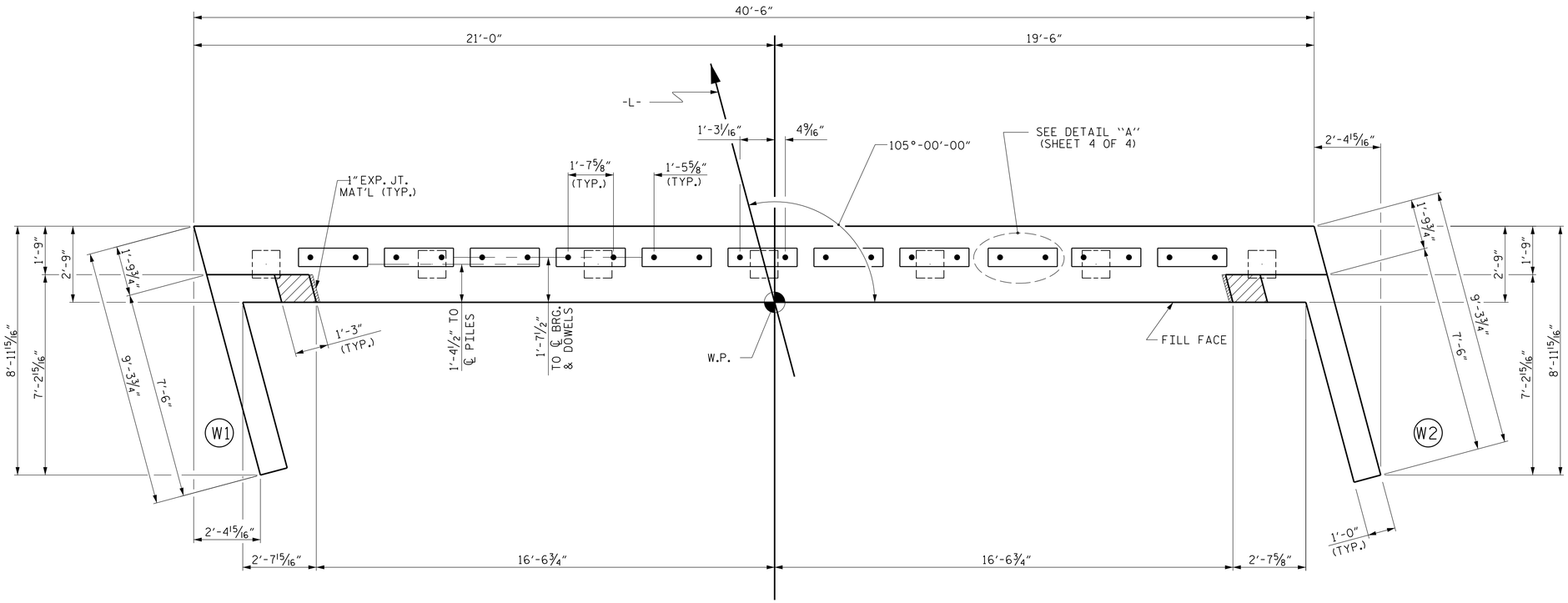

PLAN

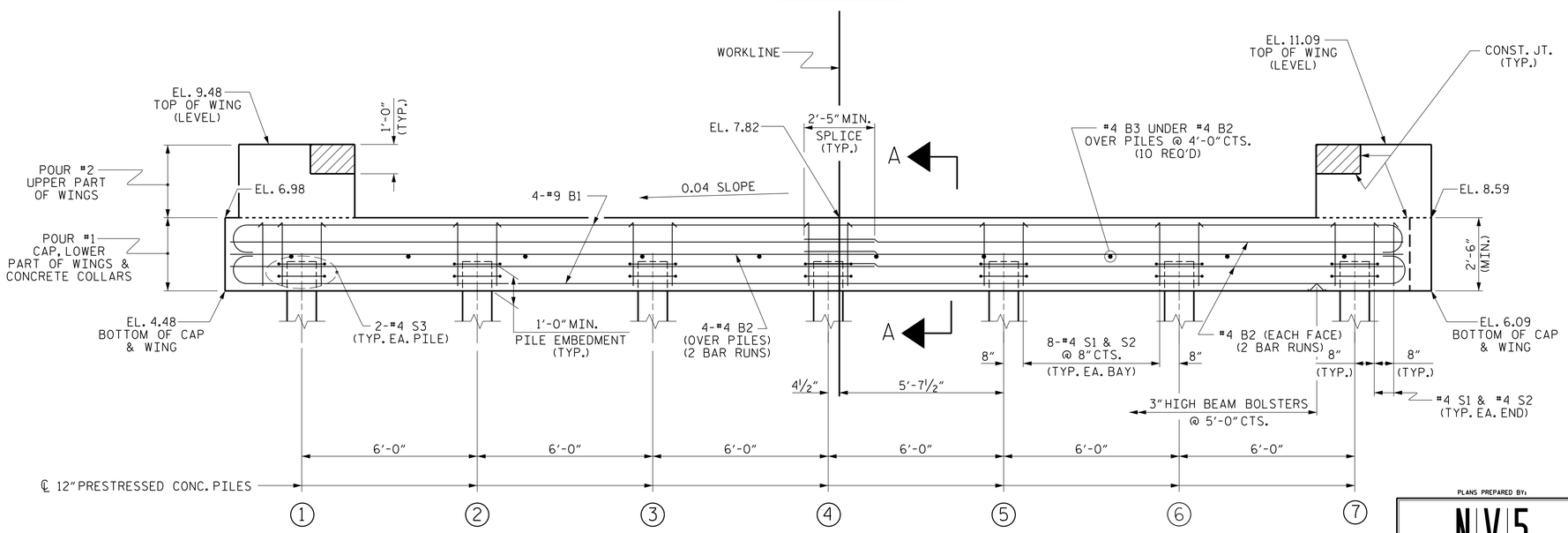

ELEVATION

WINGS NOT SHOWN FOR CLARITY.
FOR SECTION A-A, SEE SHEET 4 OF 4.

NOTES

STIRRUPS IN CAP MAY BE SHIFTED AS NECESSARY TO CLEAR DOWELS.

THE CONCRETE IN THE SHADED AREA OF THE WING SHALL BE POURED AFTER THE VERTICAL CONCRETE BARRIER RAIL IS CAST IF SLIP FORMING IS USED.

FOR WING DETAILS, SEE SHEET 3 OF 4.

TOP OF PILE ELEVATIONS	
1	5.60
2	5.84
3	6.08
4	6.32
5	6.56
6	6.80
7	7.04

PROJECT NO. 17BP.1.R.93
PERQUIMANS COUNTY
STATION: 17+08.00 -L-

SHEET 1 OF 4

STATE OF NORTH CAROLINA
DEPARTMENT OF TRANSPORTATION
RALEIGH

SUBSTRUCTURE
END BENT No. 1
30'-6" CLEAR ROADWAY - 105° SKEW

PLANS PREPARED BY:
NV5
NV5 ENGINEERS & CONSULTANTS, INC.
3300 REGENCY PARKWAY, SUITE 100
CARY, NC 27518
P: 919.851.1912 www.NV5.com
NC License # F-1333
formerly CALYX Engineers & Consultants

DocuSigned by: Gwendolyn Wilson
DocuSign Envelope ID: A0438C0A-E5B2-4E0A-A5B2-0A0A0A0A0A0A
NORTH CAROLINA PROFESSIONAL ENGINEER SEAL 045282 GWENDOLYN F. WILSON
3/26/2021

DOCUMENT NOT CONSIDERED FINAL UNLESS ALL SIGNATURES COMPLETED

DRAWN BY :	W. B. ALLEN	DATE :	8/19
CHECKED BY :	G. F. WILSON	DATE :	8/19
DESIGN ENGINEER OF RECORD:	G. F. WILSON	DATE :	3/26/21

REVISIONS							SHEET NO.
NO.	BY:	DATE:	NO.	BY:	DATE:		S-14
1			3				TOTAL SHEETS
2			4				24

3/26/2021 7:03:33 AM R:\Structures\17BP.1.R.93_SMU_EL_T10029.dgn