DocuSign Envelope ID: 297288F0-1416-4DB2-9AD3-7F8A03E8E71F

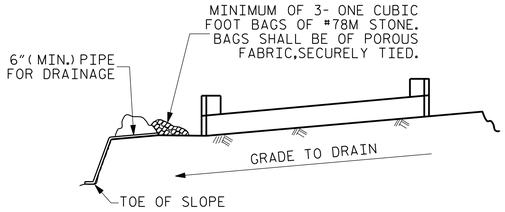

BAGGED STONE AND PIPE SHALL BE PLACED IMMEDIATELY AFTER COMPLETION OF END BENT EXCAVATION. PIPE MAY BE EITHER CONCRETE, CORRUGATED STEEL, CORRUGATED ALUMINUM ALLOY, OR CORRUGATED PLASTIC. PERFORATED PIPE WILL NOT BE ALLOWED.

BAGGED STONE SHALL REMAIN IN PLACE UNTIL THE ENGINEER DIRECTS THAT IT BE REMOVED. THE CONTRACTOR SHALL REMOVE AND DISPOSE OF SILT ACCUMULATIONS AT BAGGED STONE WHEN SO DIRECTED BY THE ENGINEER. BAGS SHALL BE REMOVED AND REPLACED WHENEVER THE ENGINEER DETERMINES THAT THEY HAVE DETERIORATED AND LOST THEIR EFFECTIVENESS.

NO SEPARATE PAYMENT WILL BE MADE FOR THIS WORK AND THE ENTIRE COST OF THIS WORK SHALL BE INCLUDED IN THE UNIT CONTRACT PRICE BID FOR THE SEVERAL PAY ITEMS.

TEMPORARY DRAINAGE AT END BENT

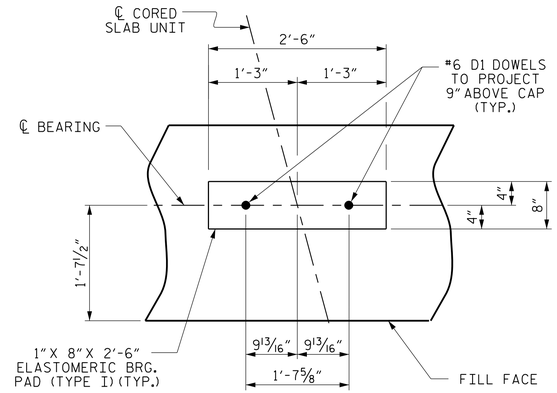

DETAIL "A"

(END BENT No. 1 SHOWN, END BENT No. 2 SIMILAR BY ROTATION)

BAR TYPES

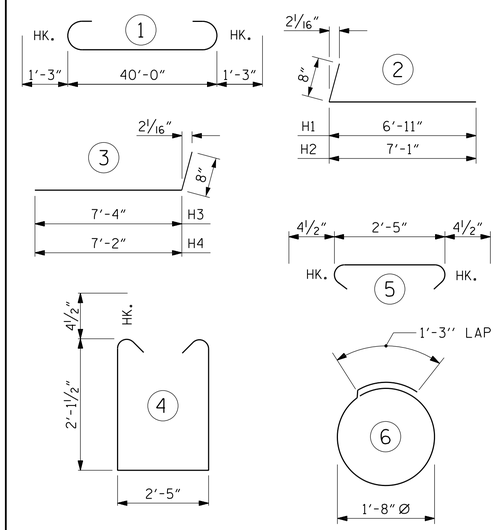

ALL BAR DIMENSIONS ARE OUT TO OUT.

END BENT No. 1	END BENT No. 2
12" PRESTRESSED CONC. PILES NO: 7 LIN. FT.= 280	12" PRESTRESSED CONC. PILES NO: 7 LIN. FT.= 280
PILE DRIVING EQUIPMENT SETUP FOR 12" PRESTRESSED CONC. PILES NO: 7	PILE DRIVING EQUIPMENT SETUP FOR 12" PRESTRESSED CONC. PILES NO: 7
PILE REDRIVES NO: 4	PILE REDRIVES NO: 4

BILL OF MATERIAL
FOR ONE END BENT

BAR	NO.	SIZE	TYPE	LENGTH	WEIGHT
B1	8	#9	1	42'-6"	1156
B2	16	#4	STR	21'-4"	228
B3	10	#4	STR	2'-5"	16
D1	22	#6	STR	1'-6"	50
H1	6	#4	2	7'-7"	30
H2	6	#4	2	7'-9"	31
H3	6	#4	3	8'-0"	32
H4	6	#4	3	7'-10"	31
K1	12	#4	STR	3'-3"	26
S1	52	#4	4	7'-5"	258
S2	52	#4	5	3'-2"	110
S3	14	#4	6	6'-6"	61
V1	49	#4	STR	4'-8"	153

REINFORCING STEEL (FOR ONE END BENT) 2182 LBS.

CLASS A CONCRETE BREAKDOWN (FOR ONE END BENT)

POUR #1 CAP & LOWER PART OF WINGS 11.2 C.Y.

POUR #2 UPPER PART OF WINGS 1.8 C.Y.

TOTAL CLASS A CONCRETE ▲ 13.0 C.Y.

▲ CONCRETE DISPLACED BY THE 12" PRESTRESSED CONCRETE PILES HAS BEEN DEDUCTED FROM THE CONCRETE QUANTITY.

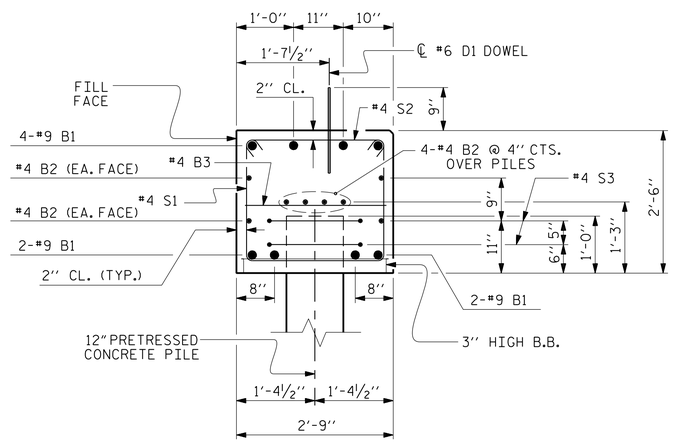

SECTION A-A

PROJECT NO. 17BP.1.R.93

PERQUIMANS COUNTY

STATION: 17+08.00 -L-

SHEET 4 OF 4

STATE OF NORTH CAROLINA
DEPARTMENT OF TRANSPORTATION
RALEIGH

SUBSTRUCTURE

END BENT No. 1 & 2 DETAILS

30'-6" CLEAR ROADWAY - 105° SKEW

PLANS PREPARED BY:

NV5 ENGINEERS & CONSULTANTS, INC.
3300 REGENCY PARKWAY, SUITE 100
CARY, NC 27518
P: 919.851.1912 www.NV5.com
NC License # F-1333
formerly CALYX Engineers & Consultants

DOCUMENT NOT CONSIDERED FINAL UNLESS ALL SIGNATURES COMPLETED

NORTH CAROLINA PROFESSIONAL ENGINEER SEAL 045282 WENDOLEN F. WILSON
DocuSigned by: Gwendolen Wilson
3/26/2021

REVISIONS								SHEET NO.
NO.	BY:	DATE:	NO.	BY:	DATE:			S-17
1			3					TOTAL SHEETS
2			4					24

DRAWN BY :	W. B. ALLEN	DATE :	8/19
CHECKED BY :	G. F. WILSON	DATE :	8/19
DESIGN ENGINEER OF RECORD:	G. F. WILSON	DATE :	3/26/21

3/26/2021 7:01:37 AM R:\Structures\17BP.R.93.SMU.E4.M0023.dgn