DocuSign Envelope ID: 297288F0-1416-4DB2-9AD3-7F8A03E8E71F

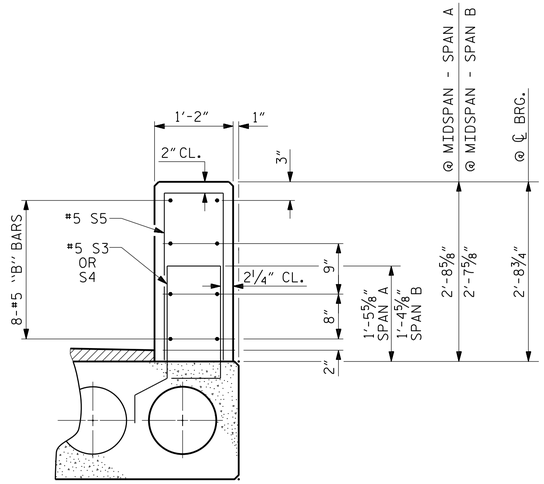

TWO BAR METAL RAIL PARAPET SECTION

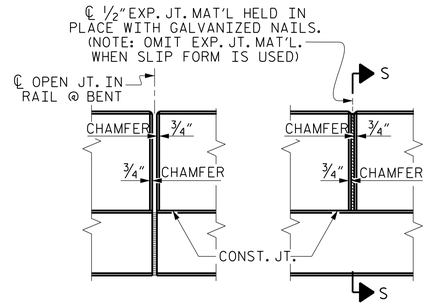

ELEVATION AT EXPANSION JOINTS

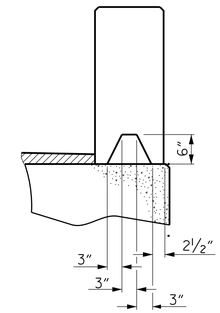

SECTION S-S

AT DAM IN OPEN JOINT
(THIS IS TO BE USED ONLY
WHEN SLIP FORM IS USED)

NOTES

ALL REINFORCING STEEL IN THE PARAPET AND END POSTS SHALL BE EPOXY COATED.

#5 "S" BARS MAY BE SHIFTED SLIGHTLY AS NECESSARY TO AVOID INTERFERENCE WITH THE TWO BAR METAL RAIL POST ANCHORAGE ASSEMBLIES.

FOR DETAILS OF GUARDRAIL ANCHOR ASSEMBLY, SEE "GUARDRAIL ANCHORAGE", SHT. NO. S-13.

FOR DETAILS OF CONCRETE INSERT SEE "RAIL POST SPACINGS AND END OF RAIL DETAILS, SHT. NO. S-10.

BILL OF MATERIAL FOR PARAPET & END POSTS

BAR	NO.	SIZE	TYPE	LENGTH	WEIGHT
✳ B10	64	#5	STR	10'-5"	695
✳ B14	64	#5	STR	15'-5"	1029
✳ E1	8	#7	STR	2'-8"	44
✳ E2	8	#7	STR	3'-2"	52
✳ E3	8	#7	STR	3'-8"	60
✳ E4	8	#7	STR	4'-2"	68
✳ E5	8	#7	STR	4'-6"	74
✳ F1	8	#6	STR	1'-10"	22
✳ F2	4	#6	STR	3'-0"	18
✳ F3	4	#6	STR	3'-3"	20
✳ F4	4	#6	STR	3'-1"	19
✳ F5	4	#6	STR	3'-4"	20
✳ S5	216	#5	1	5'-8"	1277

✳ EPOXY COATED REINFORCING STEEL LBS. =	3398
CLASS AA CONCRETE CU. YDS. =	21.0
CONCRETE PARAPET L.F. =	180.26

BAR TYPE

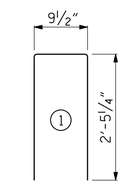

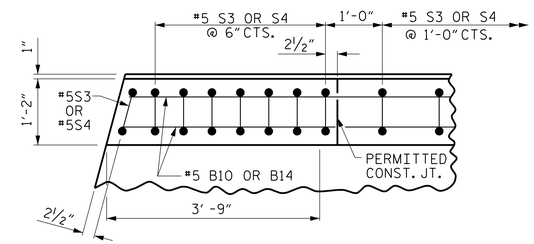

PLAN OF PARAPET

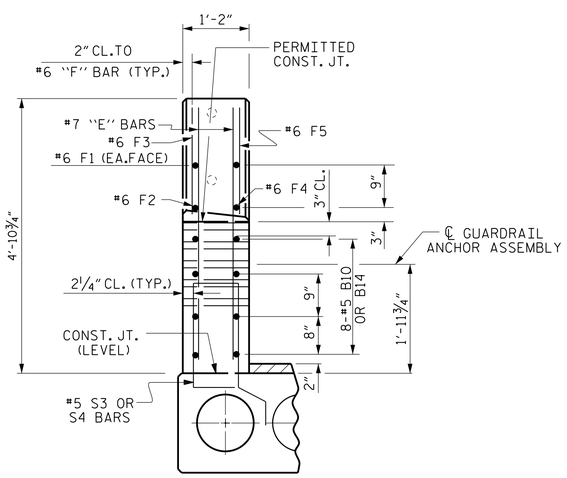

END VIEW

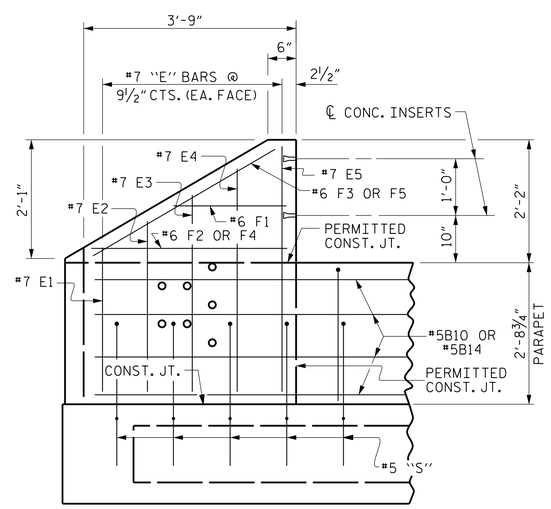

ELEVATION

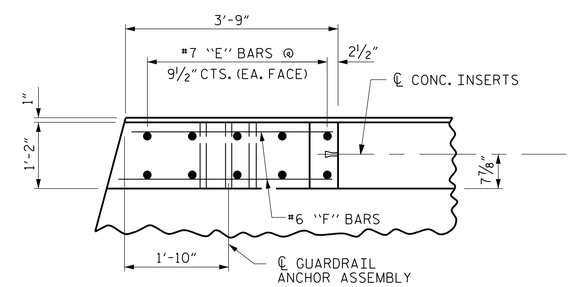

PLAN OF END POSTS

PARAPET AND END POST DETAILS

PROJECT NO. 17BP.1.R.93
PERQUIMANS COUNTY
STATION: 17+08.00 -L-

PLANS PREPARED BY:

NV5
NV5 ENGINEERS & CONSULTANTS, INC.
3300 REGENCY PARKWAY, SUITE 100
CARY, NC 27518
P: 919.851.1912 www.NV5.com
NC License # F-0333
formerly CALYX Engineers & Consultants

DOCUMENT NOT CONSIDERED FINAL UNLESS ALL SIGNATURES COMPLETED

DocuSigned by:
Gwendolyn Wilson
B1C2E4A4A3B4B5...
NORTH CAROLINA PROFESSIONAL ENGINEER SEAL 045282 GWENDOLYN F. WILSON
3/26/2021

STATE OF NORTH CAROLINA
DEPARTMENT OF TRANSPORTATION
RALEIGH

PARAPET AND
END POST DETAILS

30'-6" CLEAR ROADWAY - 105° SKEW

REVISIONS						SHEET NO.
NO.	BY:	DATE:	NO.	BY:	DATE:	S-9
1			3			TOTAL SHEETS
2			4			24

DRAWN BY :	W. B. ALLEN	DATE :	5/19
CHECKED BY :	G. F. WILSON	DATE :	8/19
DESIGN ENGINEER OF RECORD:	G. F. WILSON	DATE :	3/26/21

3/26/2021 7:40:24 AM R:\Structures\17BP.1.R.93_SMU_PR_T10029.dgn