DocuSign Envelope ID: 297288F0-1416-4DB2-9AD3-7F8A03E8E71F

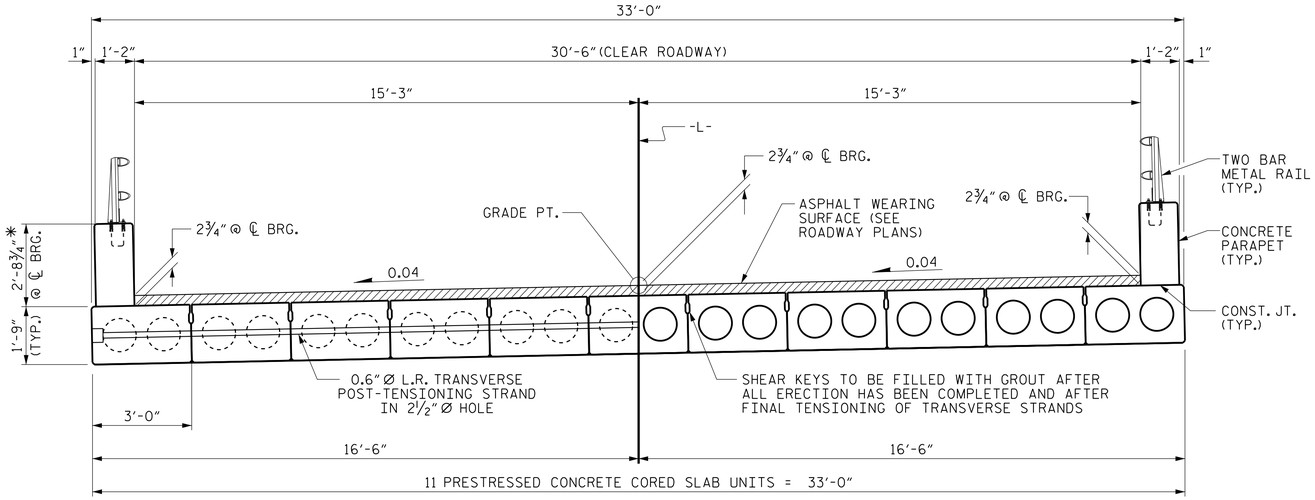


HALF SECTION
AT INTERMEDIATE DIAPHRAGMS

HALF SECTION
THROUGH VOIDS

## TYPICAL SECTION

* - THE MAXIMUM PARAPET HEIGHT AND ASPHALT THICKNESS IS SHOWN. THE HEIGHT OF THE PARAPET AND ASPHALT THICKNESS VARIES WHILE THE TOP OF THE PARAPET FOLLOWS THE PROFILE OF THE GUTTERLINE. FOR PARAPET HEIGHT DETAILS AND ASPHALT THICKNESS, SEE SHEET S-9.

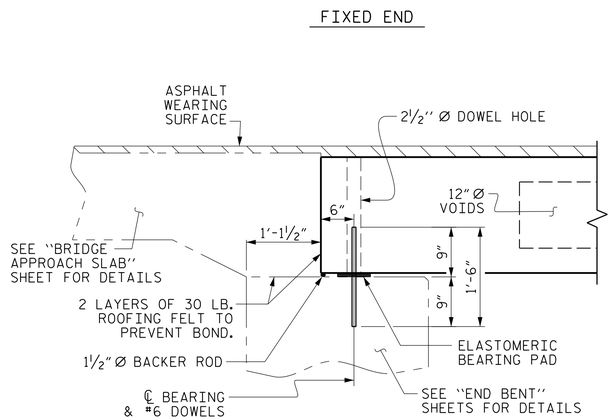


## SECTION AT END BENT

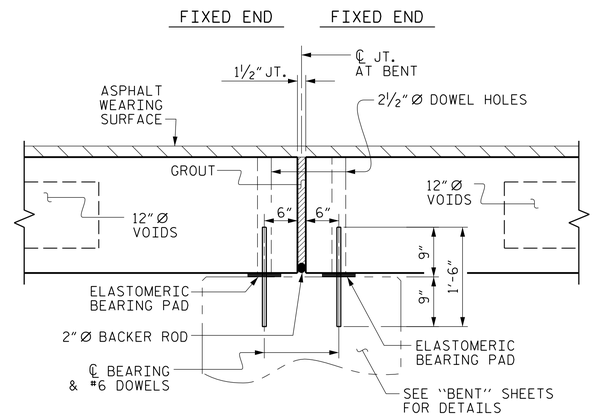


## SECTION AT BENT

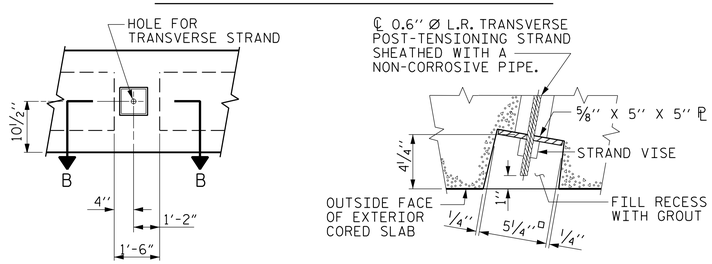


ELEVATION VIEW

SECTION B-B

## GROUTED RECESS AT END OF POST-TENSIONED STRAND OF CORED SLABS

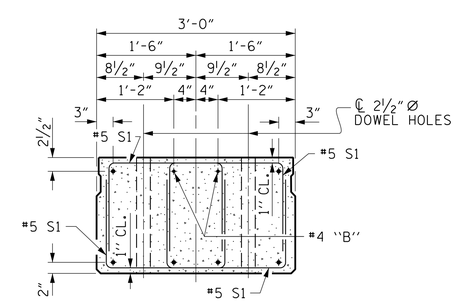


## END ELEVATION

SHOWING PLACEMENT OF DOUBLE STIRRUPS AND LOCATION OF DOWEL HOLES. (STRAND LAYOUT NOT SHOWN.) INTERIOR SLAB UNIT SHOWN-EXTERIOR SLAB UNIT SIMILAR EXCEPT SHEAR KEY LOCATION.

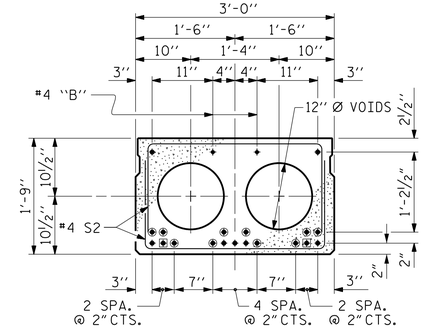


INTERIOR SLAB SECTION
(35' UNIT)
(9 STRANDS REQUIRED)

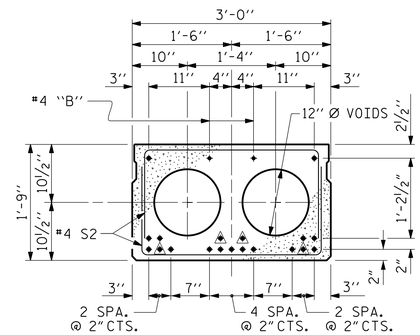


INTERIOR SLAB SECTION
(55' UNIT)
(19 STRANDS REQUIRED)

## 0.6" Ø LOW RELAXATION STRAND LAYOUT

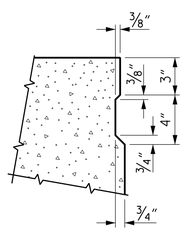


## SHEAR KEY DETAIL

NOTE: OMIT SHEAR KEY ON OUTSIDE FACE OF EXTERIOR CORED SLABS.

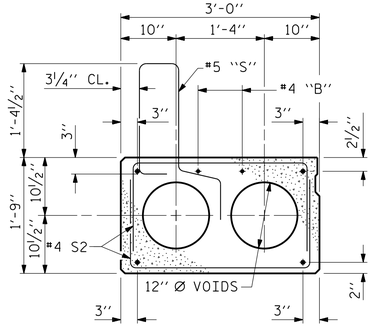


## EXT. SLAB SECTION

(FOR PRESTRESSED STRAND LAYOUT, SEE INTERIOR SLAB SECTION.)

BOND SHALL BE BROKEN ON THESE STRANDS FOR A DISTANCE OF 6'-0" FROM END OF CORED SLAB UNIT. SEE STANDARD SPECIFICATIONS, ARTICLE 1078-7.

BOND SHALL BE BROKEN ON THESE STRANDS FOR A DISTANCE OF 2'-0" FROM END OF CORED SLAB UNIT. SEE STANDARD SPECIFICATIONS, ARTICLE 1078-7.

OPTIONAL FULL LENGTH DEBONDED STRANDS. THESE STRANDS ARE NOT REQUIRED. IF THE FABRICATOR CHOOSES TO INCLUDE THESE STRANDS IN THE CORED SLAB UNIT, THE STRANDS SHALL BE DEBONDED FOR THE FULL LENGTH OF THE UNIT AT NO ADDITIONAL COST. SEE STANDARD SPECIFICATIONS, ARTICLE 1078-7.

## DEBONDING LEGEND

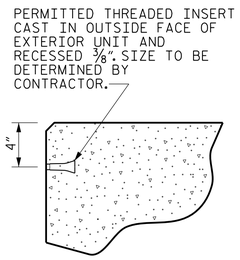


THREADED INSERT DETAIL

PROJECT NO. 17BP.1.R.93
PERQUIMANS COUNTY
STATION: 17+08.00 -L-

SHEET 1 OF 4

PLANS PREPARED BY:

NV5 ENGINEERS & CONSULTANTS, INC.
3300 REGENCY PARKWAY, SUITE 100
CARY, NC 27518
P: 919.851.1912 www.NV5.com
NC License # F-1333
formerly CALYX Engineers & Consultants

**DOCUMENT NOT CONSIDERED FINAL UNLESS ALL SIGNATURES COMPLETED**

NORTH CAROLINA PROFESSIONAL ENGINEER SEAL 045282 GWENDOLEN F. WILSON
DocuSigned by: Gwendolen F. Wilson
3/26/2021

STATE OF NORTH CAROLINA
DEPARTMENT OF TRANSPORTATION
RALEIGH

3'-0" X 1'-9"
PRESTRESSED CONCRETE
CORED SLAB UNIT
105° SKEW

30'-6" CLEAR ROADWAY - 105° SKEW

| REVISIONS | | | | | | SHEET NO. |
|---|---|---|---|---|---|---|
| NO. | BY: | DATE: | NO. | BY: | DATE: | S-5 |
| 1 | | | 3 | | | TOTAL SHEETS |
| 2 | | | 4 | | | 24 |

| | | | |
|---|---|---|---|
| DRAWN BY : | W. B. ALLEN | DATE : | 5/19 |
| CHECKED BY : | G. F. WILSON | DATE : | 8/19 |
| DESIGN ENGINEER OF RECORD: | G. F. WILSON | DATE : | 3/26/21 |

3/26/2021 7:09:19 AM R:\Structures\17BP.1.R.93_SMU_CSL_7I0029.dgn