DocuSign Envelope ID: 297288F0-1416-4DB2-9AD3-7F8A03E8E71F

PROJECT REFERENCE NO.	SHEET NO.
17BPJR.93	2A-1
ROADWAY DESIGN ENGINEER	PAVEMENT DESIGN ENGINEER

NV5 ENGINEERS & CONSULTANTS, INC.
3300 REGENCY PARKWAY, SUITE 100
CARY, NC 27518
P: 919.851.1912 www.NV5.com
NC License # F-1333

NORTH CAROLINA PROFESSIONAL SEAL 27334 ENGINEER MICHAEL ANDREW HONT
Michael Hont
DocuSigned by:
3/26/2021
3/26/2021

DOCUMENT NOT CONSIDERED FINAL UNLESS ALL SIGNATURES COMPLETED

PAVEMENT SCHEDULE

C1	PROP. APPROX. 3″ ASPHALT CONCRETE SURFACE COURSE, TYPE S9.5B, AT AN AVERAGE RATE OF 165 LBS. PER SQ. YD. IN EACH OF TWO LAYERS.
C2	PROP. VAR. DEPTH ASPHALT CONCRETE SURFACE COURSE TYPE S9.5B, AT AN AVERAGE RATE OF 110 LBS. PER SQ. YD. PER 1″ DEPTH. TO BE PLACED IN LAYERS NOT TO EXCEED 2″ IN DEPTH.
E1	PROP. APPROX. 5½″ ASPHALT CONCRETE BASE COURSE, TYPE B25.0C, AT AN AVERAGE RATE OF 627 LBS. PER SQ. YD.
E2	PROP. VAR. DEPTH ASPHALT CONCRETE BASE COURSE, TYPE B25.0C, AT AN AVERAGE RATE OF 114 LBS. PER SQ. YD. PER 1″ DEPTH. TO BE PLACE IN LAYERS NOT LESS THAN 3″ IN DEPTH OR GREATER THAN 5½″ IN DEPTH.
J1	PROP. 6″ INCIDENTAL STONE BASE
R	PROP. SHOULDER BERM GUTTER
T	EARTH MATERIAL.
U	EXISTING PAVEMENT.
W	VARIABLE DEPTH ASPHALT PAVEMENT (SEE WEDGING DETAIL)

NOTE: PAVEMENT EDGE SLOPES ARE 1:1 UNLESS SHOWN OTHERWISE.

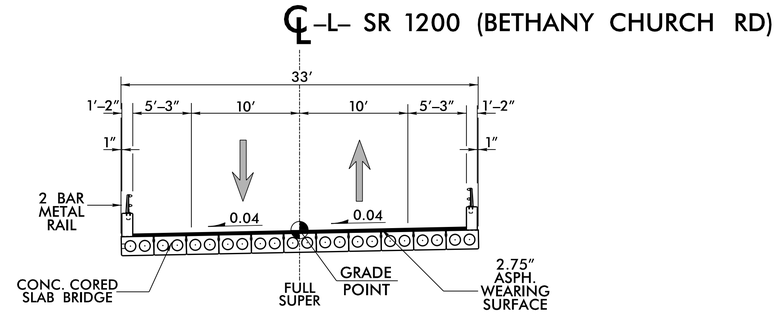

BRIDGE SKETCH NO.1
BRIDGE #29

USE BRIDGE SKETCH NO. 1 AS FOLLOWS:
–L– STA. 16+62.94 (BEGIN BRIDGE) TO 17+53.06 (END BRIDGE)

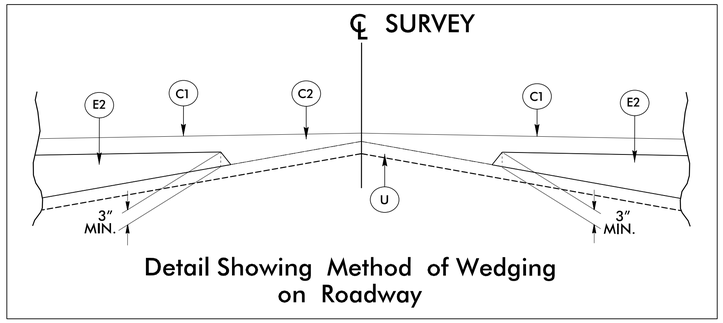

Detail Showing Method of Wedging on Roadway

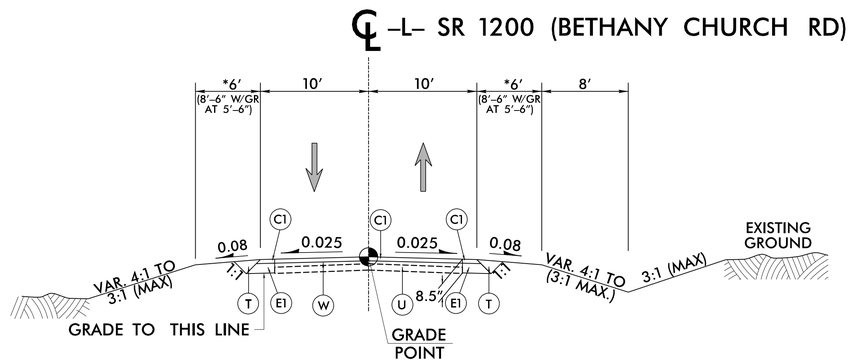

TYPICAL SECTION NO. 1

USE TYPICAL SECTION NO. 1 AS FOLLOWS:
–L– STA. 12+75.11 TO –L– STA. 15+00.00
–L– STA. 18+75.00 TO –L– STA. 20+10.00

*6′ PROP. SHOULDER UTILIZED TO BETTER MATCH EXIST. MIN. WIDTH

6/2/99

3/16/2021
R:\Roadway\Proj\B5416_RDY_TYP.dgn
Eliza Martin