DocuSign Envelope ID: 297288F0-1416-4DB2-9AD3-7F8A03E8E71F

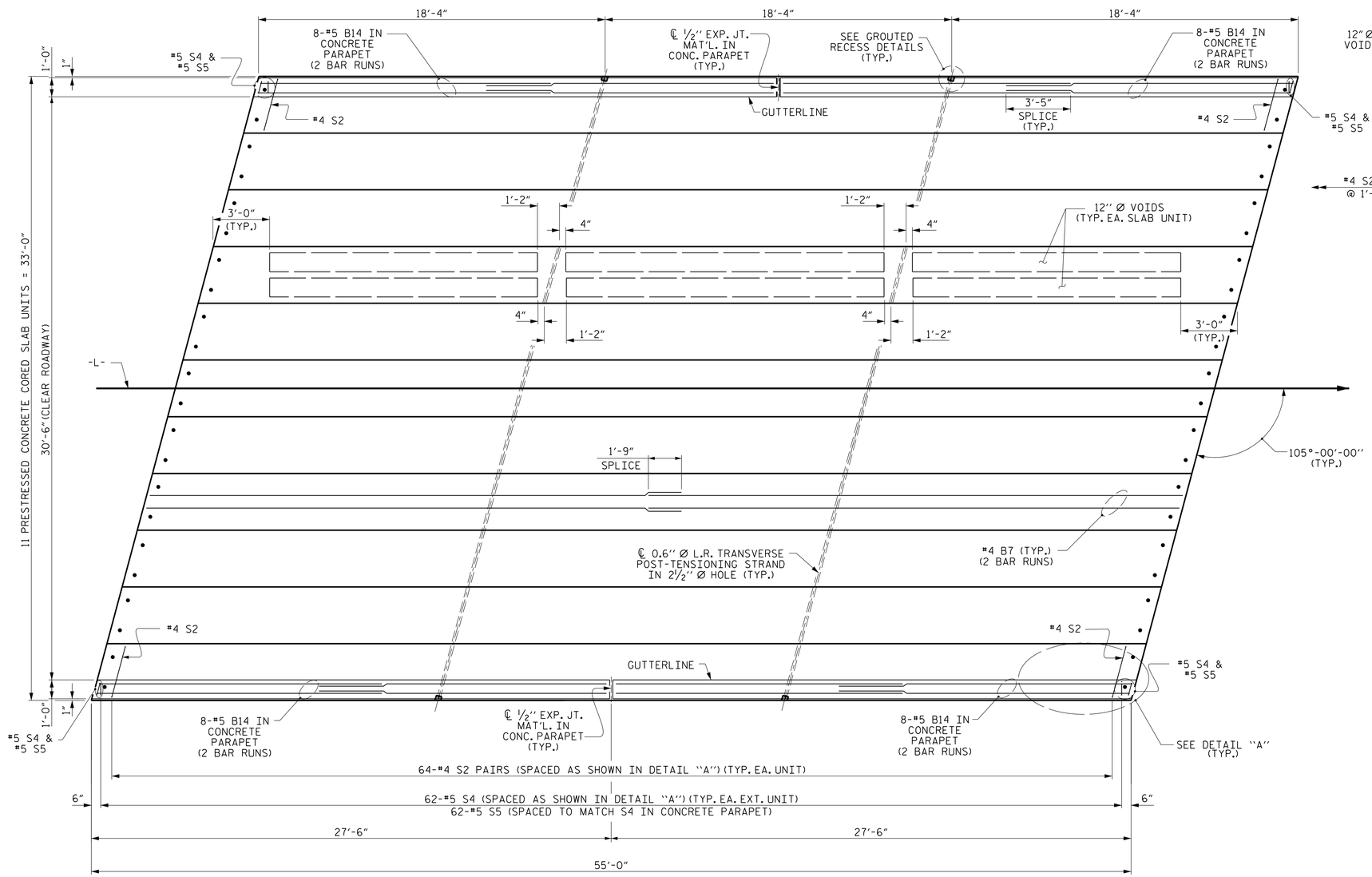

PLAN OF UNIT

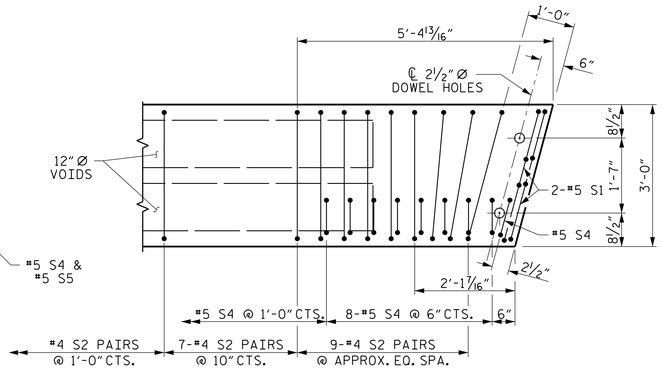

DETAIL "A"

(SIMILAR EACH END OF UNIT)
NOTE: EXTERIOR UNIT SHOWN - INTERIOR UNIT SIMILAR EXCEPT OMIT #5 S4 BARS.

PROJECT NO. 17BP.1.R.93

PERQUIMANS COUNTY

STATION: 17+08.00 -L-

SHEET 3 OF 4

STATE OF NORTH CAROLINA
DEPARTMENT OF TRANSPORTATION
RALEIGH

PLAN OF 55' UNIT SPAN B

30'-6" CLEAR ROADWAY - 105° SKEW

REVISIONS						SHEET NO.
NO.	BY:	DATE:	NO.	BY:	DATE:	S-7
1			3			TOTAL SHEETS
2			4			24

PLANS PREPARED BY:

NV5 ENGINEERS & CONSULTANTS, INC.
3300 REGENCY PARKWAY, SUITE 100
CARY, NC 27518
P: 919.851.1912 www.NV5.com
NC License # F-1333
formerly CALYX Engineers & Consultants

DocuSigned by:
Gwendolyn F. Wilson
B0C9BF A043 9465...
NORTH CAROLINA PROFESSIONAL ENGINEER SEAL 046282 GWENDOLYN F. WILSON
3/26/2021

DOCUMENT NOT CONSIDERED FINAL UNLESS ALL SIGNATURES COMPLETED

DRAWN BY :	W. B. ALLEN	DATE :	5/19
CHECKED BY :	G. F. WILSON	DATE :	8/19
DESIGN ENGINEER OF RECORD:	G. F. WILSON	DATE :	3/26/21

3/26/2021 7:02:22 AM R:\Structures\17BP.1.R.93_SMU_CS3_70028.dgn